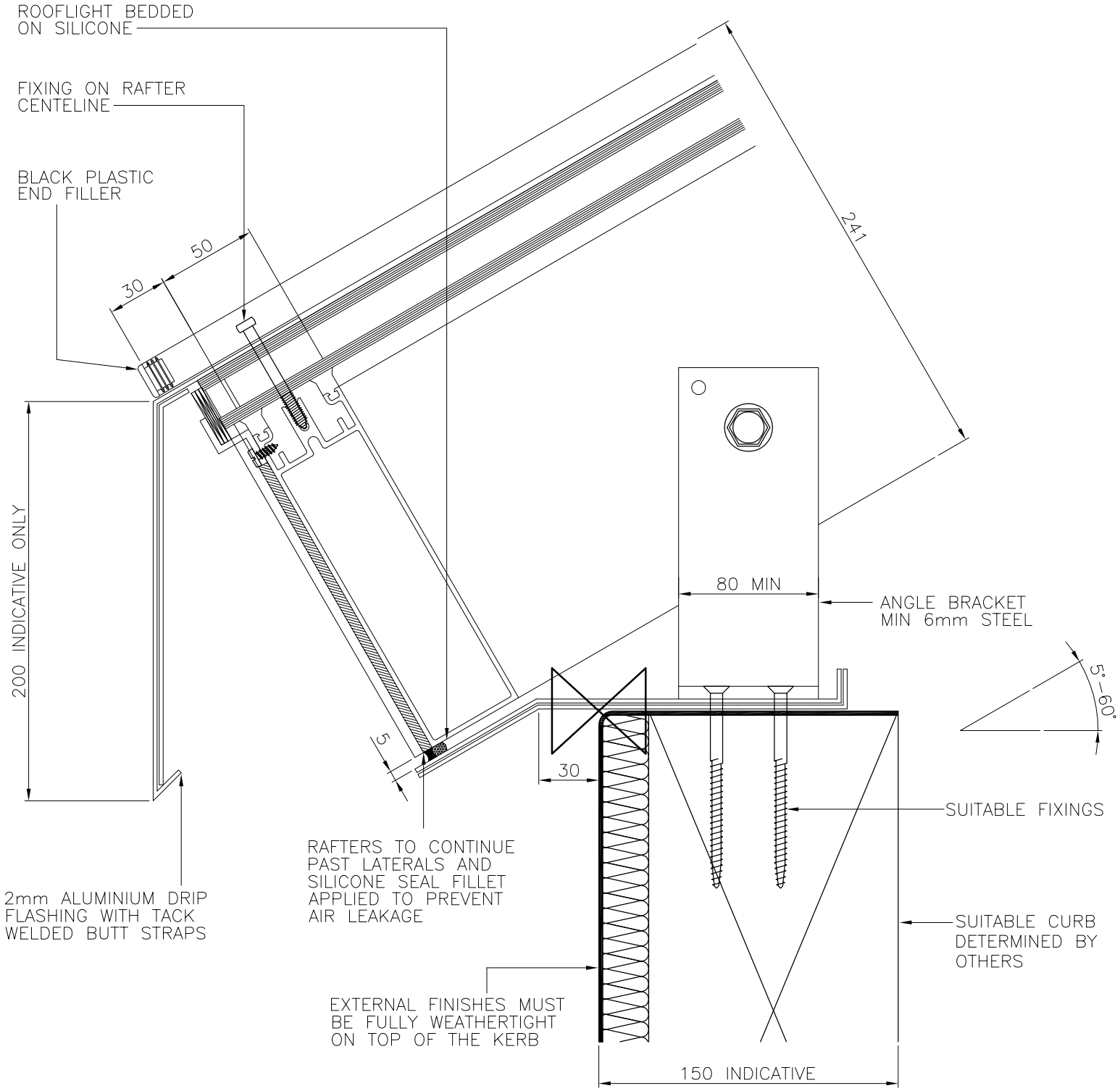① AL/104 ANGLED CILL DETAIL