AL/100 VERTICAL CILL DETAIL ALTERNATIVE
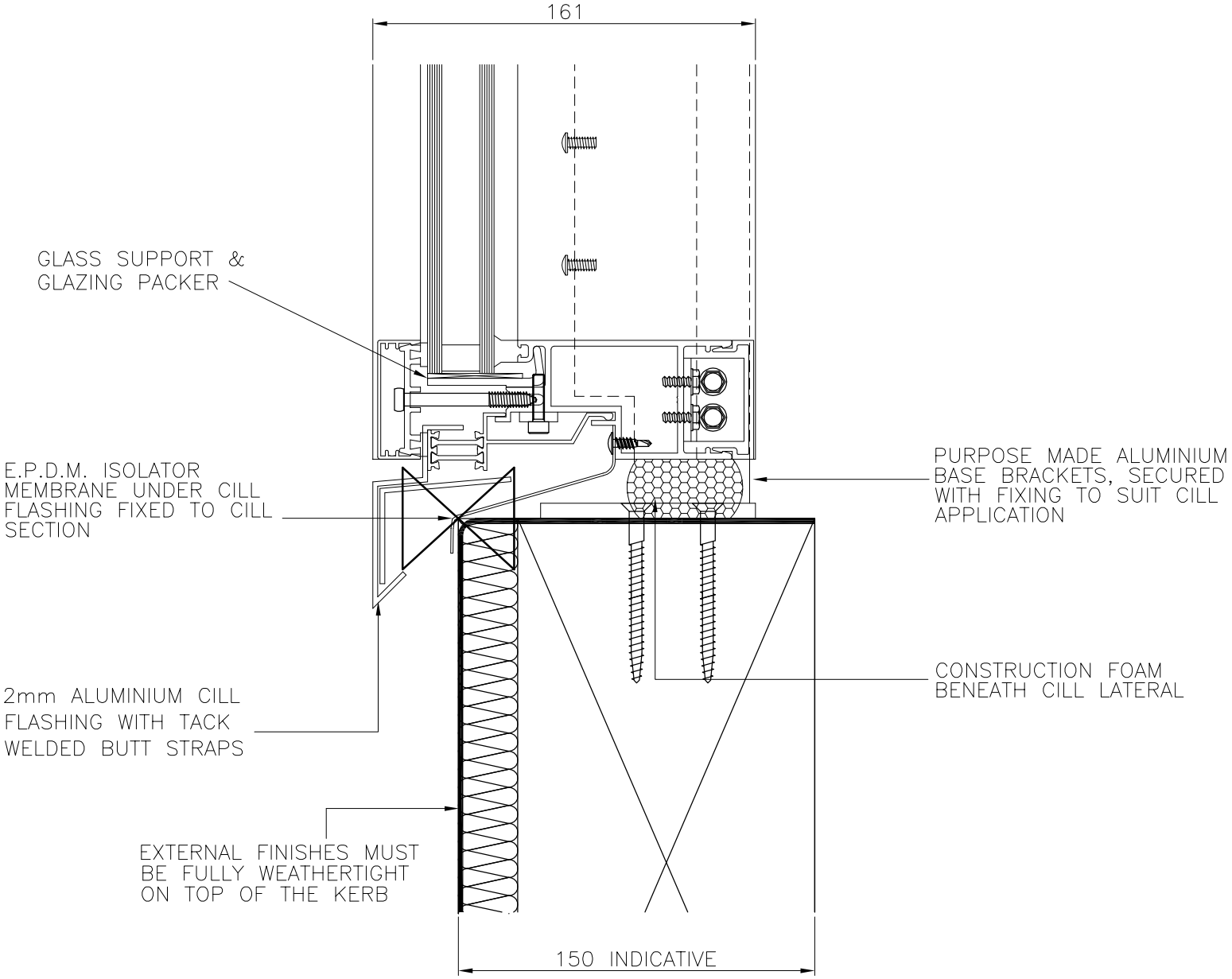
3