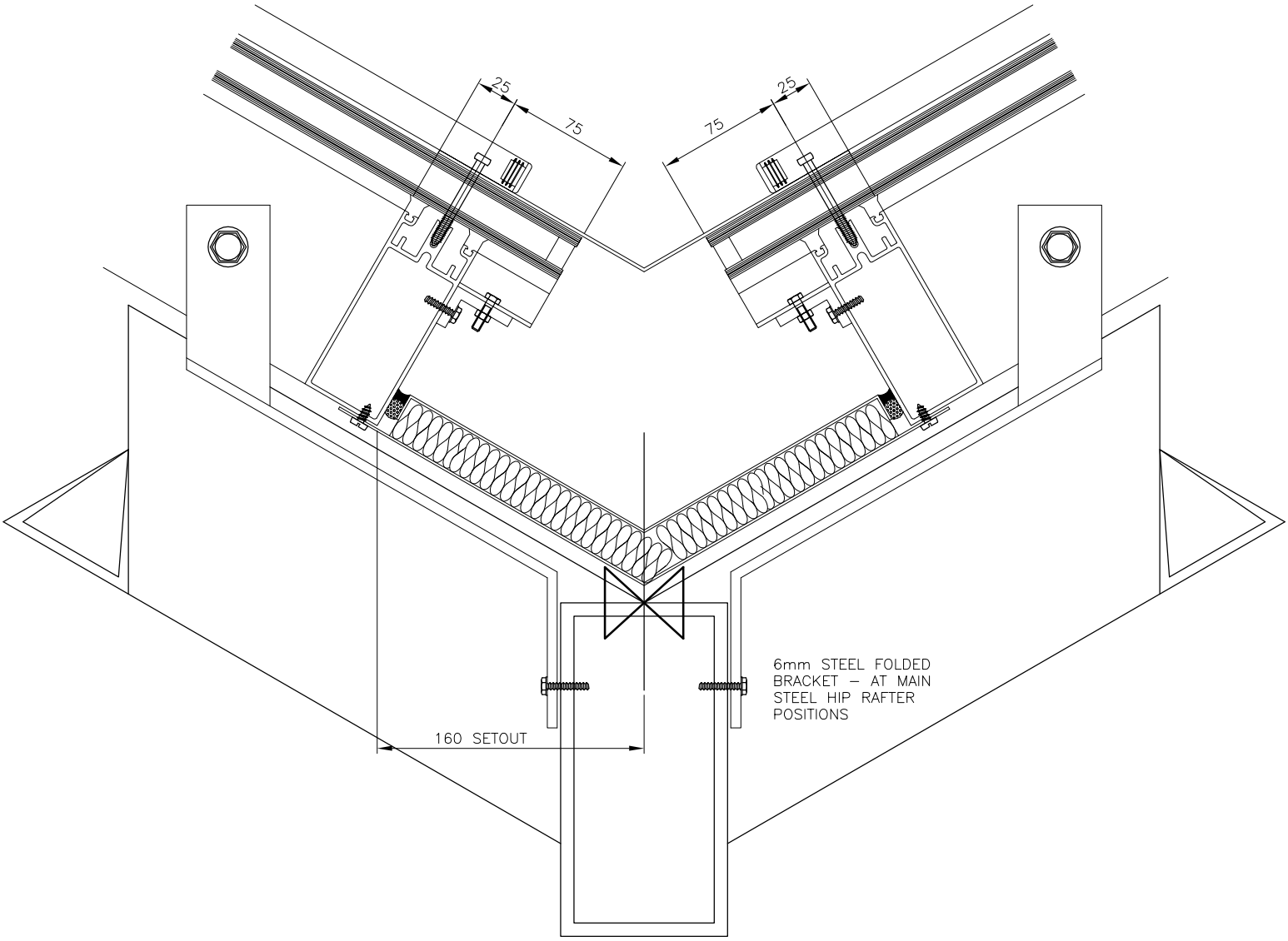18 AL/101 VALLEY DETAIL